APPROVED BY _____ DATE _____ PAINT CODE Z1 OXFORD WHITE

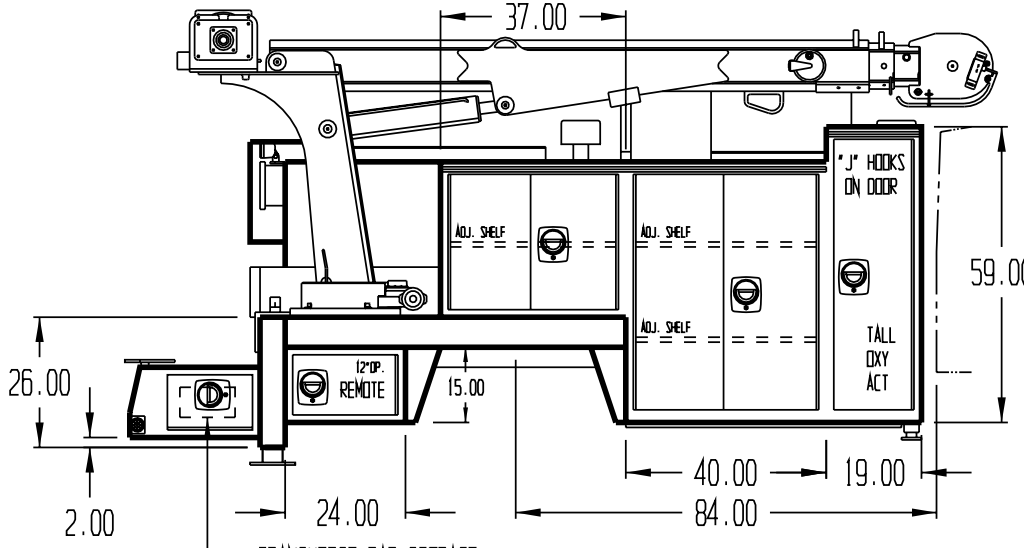

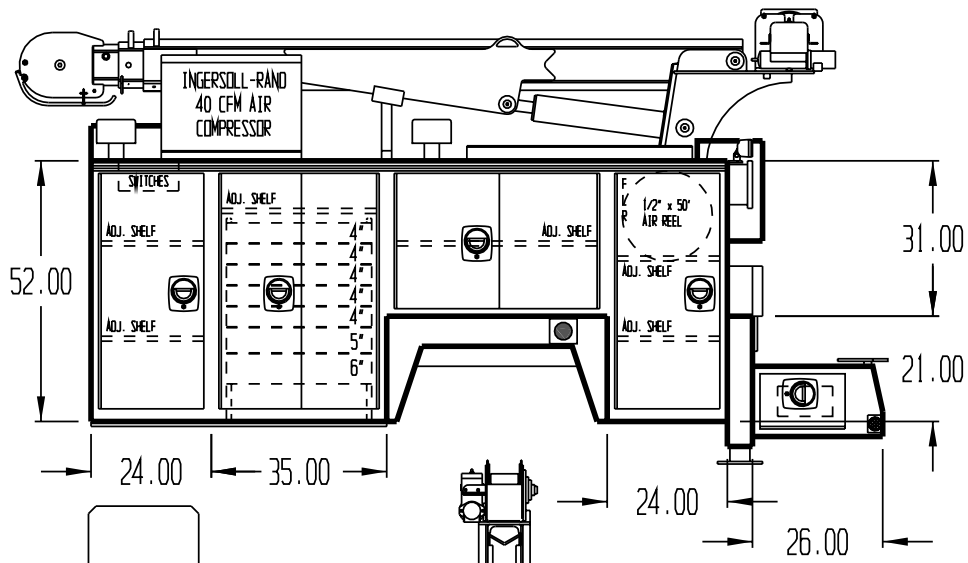

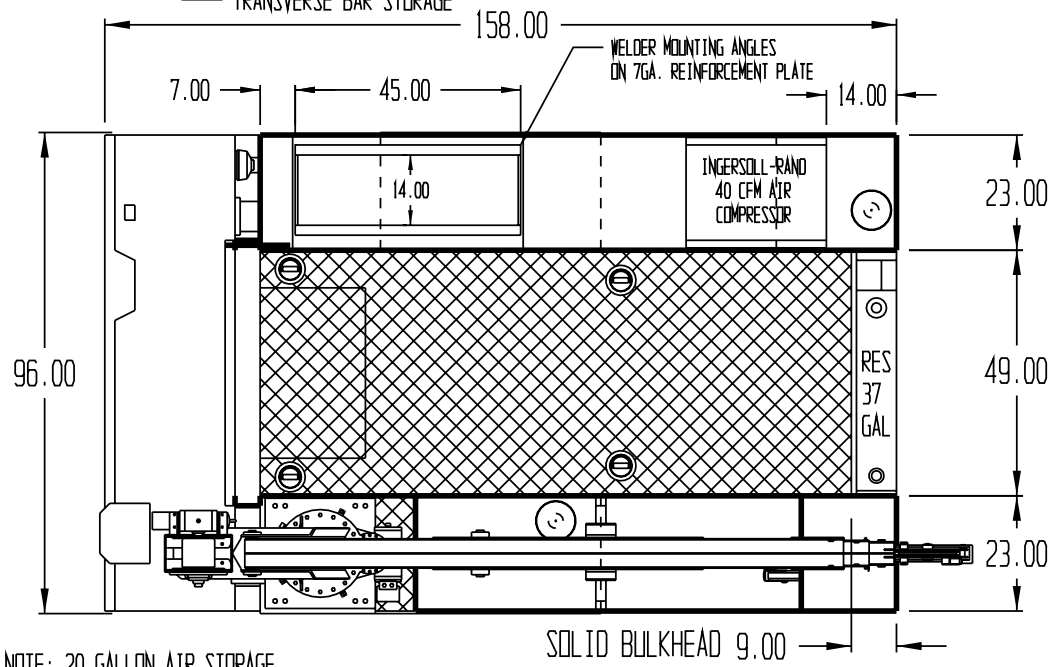

NOTE: 20 GALLON AIR STORAGE MOUNTED IN CHASSIS FRAME

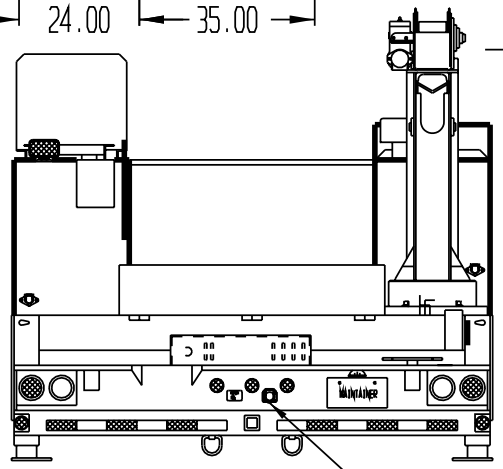

NOTE: (6) INTERIOR PETERSON LIGHTS #391 SS 1, 2, 3, 4 CS 2, 3

NOTE: PROTECTIVE SPRAY COVERING ON: CARGO CENTER DECK, COMPARTMENT TOPS, SIDES, (NOT BACKS), FRONT BULKHEAD, TAIL GATE, & TAIL GATE EXTENSION, REAR WORK BENCH BUMPER, AND STEP

NOTE: USABLE CENTER DECK CARGO WIDTH 48.50"

NOTE: 6" SILLS & 4" X-MEMBERS

PLEASE REPORT ANY ERRORS FOUND ON THIS PRINT

THIS PRINT CONTAINS CONFIDENTIAL INFORMATION AND IS THE SOLE PROPERTY OF MAINTAINER CORP. OF IOWA INC. AND IS NOT TO BE COPIED OR REPRODUCED WITHOUT THE EXPRESSED WRITTEN PERMISSION OF MAINTAINER CORP. OF IOWA INC.

PROPRIETARY DATA PROPERTY OF MAINTAINER CORPORATION OF IOWA, INC.

COPYRIGHT © 2002

UOS DIMENSIONS ARE IN INCHES GENERAL TOLERANCES

BREAK ALL EDGES .01 X 45°	ANGULAR ± 1° .XX ± .03 .XXX ± .005
UOS RADII	UOS ANGLES

MATERIAL:

SCALE: 1:26 SIZE: B

DRAWING NUMBER: Z167K-1

DFTM. KJB DATE: 2-26-08

MADE IN THE USA

6000TT-1-084 HOUSTON AUTOMOTIVE GROUP

Maintainer
Corporation of Iowa, Inc.
P.O. Box 349 1701 S. 2nd Avenue
Sheldon, Iowa 51201